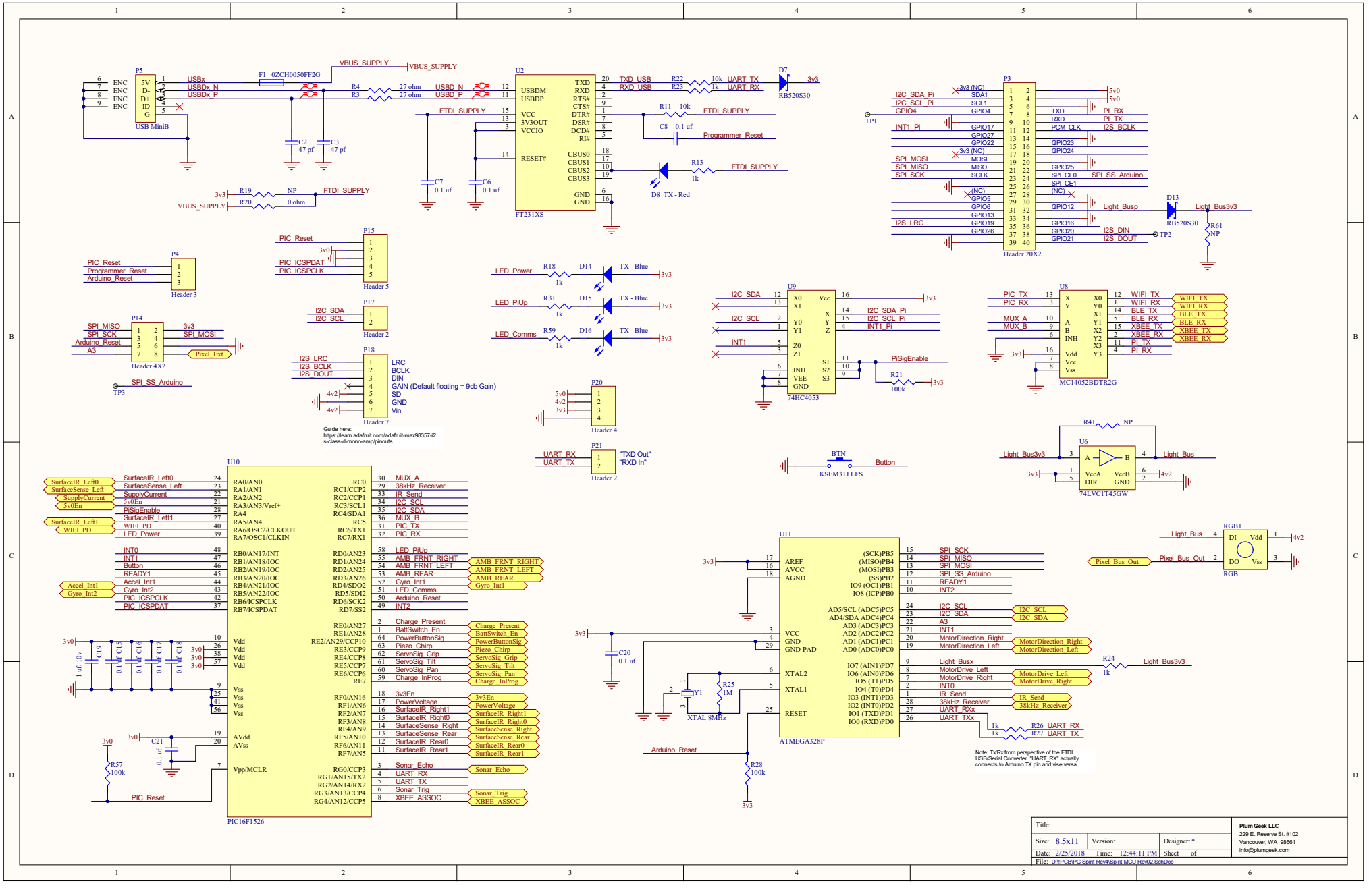
P5
USB MiniB
F1 0ZCH0050FF2G
VBUS_SUPPLY
USBx
USBDx_N
USBDx_P
R4 27 ohm
R3 27 ohm
USBD_N
USBD_P
C2 47 pf
C3 47 pf
U2
FT231XS
TXD_USB
RXD_USB
R22 10k
R23 1k
UART_TX
UART_RX
D7
RB520S30
3v3
FTDI_SUPPLY
R11 10k
C8 0.1 uf
Programmer_Reset
R13 1k
D8 TX - Red
C7 0.1 uf
C6 0.1 uf
R19 NP
R20 0 ohm
P3
Header 20X2
I2C_SDA_Pi
I2C_SCL_Pi
GPIO4
INT1_Pi
SPI_MOSI
SPI_MISO
SPI_SCK
I2S_LRC
TXD
RXD
PCM_CLK
SPI_CE0
SPI_CE1
Light_Busp
I2S_DIN
I2S_DOUT
PI_RX
PI_TX
I2S_BCLK
SPI_SS_Arduino
TP1
TP2
D13
RB520S30
Light_Bus3v3
R61 NP
P4
Header 3
PIC_Reset
Programmer_Reset
Arduino_Reset
P15
Header 5
PIC_ICSPDAT
PIC_ICSPCLK
P17
Header 2
I2C_SDA
I2C_SCL
P14
Header 4X2
SPI_MISO
SPI_SCK
Arduino_Reset
A3
SPI_MOSI
Pixel_Ext
TP3
P18
Header 7
I2S_LRC
I2S_BCLK
I2S_DOUT
LRC
BCLK
DIN
GAIN (Default floating = 9db Gain)
SD
GND
Vin
Guide here:
https://learn.adafruit.com/adafruit-max98357-i2s-class-d-mono-amp/pinouts
LED_Power
LED_PiUp
LED_Comms
R18 1k
R31 1k
R59 1k
D14
D15
D16
TX - Blue
P20
Header 4
U9
74HC4053
PiSigEnable
R21 100k
U8
MC14052BDTR2G
PIC_TX
PIC_RX
MUX_A
MUX_B
WIFI_TX
WIFI_RX
BLE_TX
BLE_RX
XBEE_TX
XBEE_RX
PI_TX
PI_RX
P21
Header 2
UART_RX
UART_TX
"TXD Out"
"RXD In"
BTN
KSEM31J LFS
Button
R41 NP
U6
74LVC1T45GW
Light_Bus3v3
Light_Bus
U10
PIC16F1526
SurfaceIR_Left0
SurfaceSense_Left
SupplyCurrent
5v0En
PiSigEnable
SurfaceIR_Left1
WIFI_PD
LED_Power
INT0
INT1
Button
READY1
Accel_Int1
Gyro_Int2
PIC_ICSPCLK
PIC_ICSPDAT
MUX_A
38kHz_Receiver
IR_Send
I2C_SCL
I2C_SDA
MUX_B
PIC_TX
PIC_RX
LED_PiUp
AMB_FRNT_RIGHT
AMB_FRNT_LEFT
AMB_REAR
Gyro_Int1
LED_Comms
Arduino_Reset
INT2
Charge_Present
BattSwitch_En
PowerButtonSig
Piezo_Chirp
ServoSig_Grip
ServoSig_Tilt
ServoSig_Pan
Charge_InProg
3v3En
PowerVoltage
SurfaceIR_Right1
SurfaceIR_Right0
SurfaceSense_Right
SurfaceSense_Rear
SurfaceIR_Rear0
SurfaceIR_Rear1
Sonar_Echo
UART_RX
UART_TX
Sonar_Trig
XBEE_ASSOC
C19 1 uf, 10v
C15 0.1uf
C16 0.1uf
C17 0.1uf
C18 0.1uf
C21 0.1 uf
R57 100k
PIC_Reset
U11
ATMEGA328P
SPI_SCK
SPI_MISO
SPI_MOSI
SPI_SS_Arduino
READY1
INT2
I2C_SCL
I2C_SDA
A3
INT1
MotorDirection_Right
MotorDirection_Left
Light_Busx
MotorDrive_Left
MotorDrive_Right
INT0
IR_Send
38kHz_Receiver
UART_RXx
UART_TXx
R24 1k
Light_Bus3v3
R26 1k
R27 1k
UART_RX
UART_TX
Note: Tx/Rx from perspective of the FTDI USB/Serial Converter. "UART_RX" actually connects to Arduino TX pin and vise versa.
C20 0.1 uf
Y1
XTAL 8MHz
R25 1M
R28 100k
Arduino_Reset
RGB1
RGB
Pixel_Bus_Out
Title:
Size: 8.5x11
Version:
Designer: *
Date: 2/25/2018
Time: 12:44:11 PM
Sheet of
File: D:\PCB\PG Spirit Rev4\Spirit MCU Rev02.SchDoc
Plum Geek LLC
229 E. Reserve St. #102
Vancouver, WA 98661
info@plumgeek.com